NOVA LUCE

PRODUCT DATASHEET

Version: 001

PRODUCT PHOTOGRAPH



TECHNICAL DRAWING

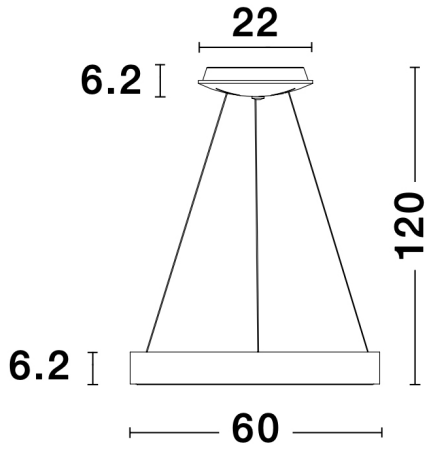

GENERAL INFORMATION

Product Code	**9453455**
Collection	**Decorative**
Product Category	**Suspension**
Product Family	**Rando Thin**
Mounting Location	**Ceiling**
Application Environment	**Indoor**

DIMENSION & WEIGHT

LxWxH (cm)	**D: 60 H: 120**
Cut out (cm)	**N/A**
Weight (Kgr)	**3.5**

MATERIAL & COLOR

Product Color	**Coffee**
Body Material	**Aluminium & Acrylic**

APPLICATION & MOUNTING

Ambient Working Temp.	**Max 45 oC**
Type of Protection	**IP20**
Dimmable	**Yes**
Type of Dimming (Optional)	**Triac**
Mounting type	**Ceiling**
Mounting Depth (cm)	**N/A**
Led Module Replaceable	**No**
Light Source	**LED**

NOVA LUCE S.A

Schimatari Viotias
32009, Greece

+30 22620 58 121
+30 22620 56 743

info@novaluce.com
www.novaluce.com

NOVA LUCE

PRODUCT DATASHEET

Version: 001

ELECTRICAL DATA

Power (Nominal)	**50W**
Input voltage (Nominal)	**220-240Vac**
Mains Frequency	**50/60Hz**

PHOTOMETRICAL DATA

Luminus Flux	**2864 lm**
Color Temperature	**3000K**
Light Color (Designation)	**Warm White**

WARRANTY

Warranty	**3 Years**

CERTIFICATES

Certificates	**CE,UKCA**

NOVA LUCE S.A

Schimatari Viotias
32009, Greece

+30 22620 58 121
+30 22620 56 743

info@novaluce.com
www.novaluce.com